型番 LC-CL0001

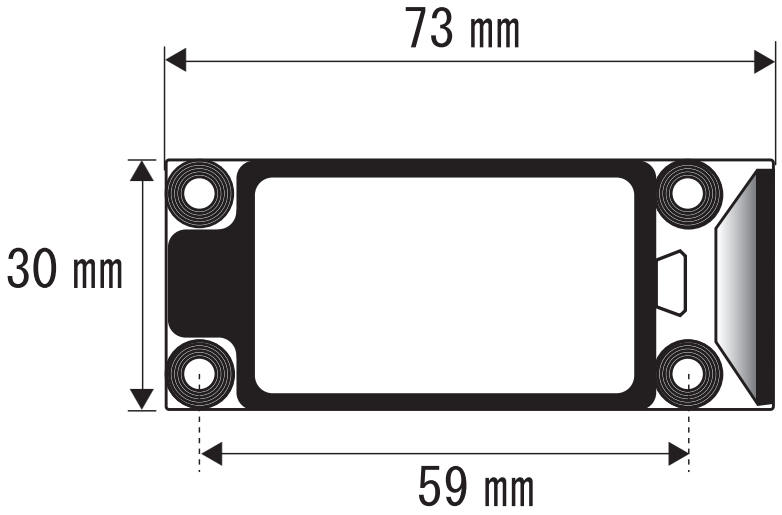
73 mm
30 mm
59 mm

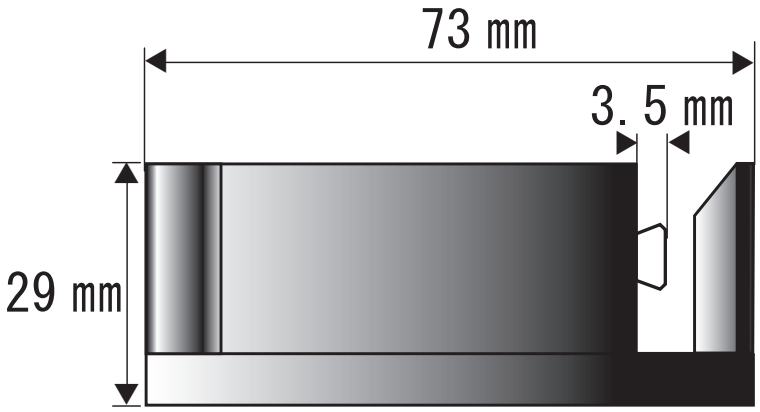
73 mm
3. 5 mm
29 mm

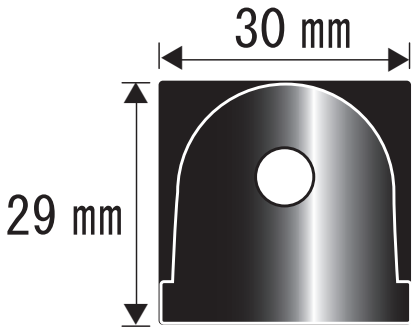
30 mm
29 mm

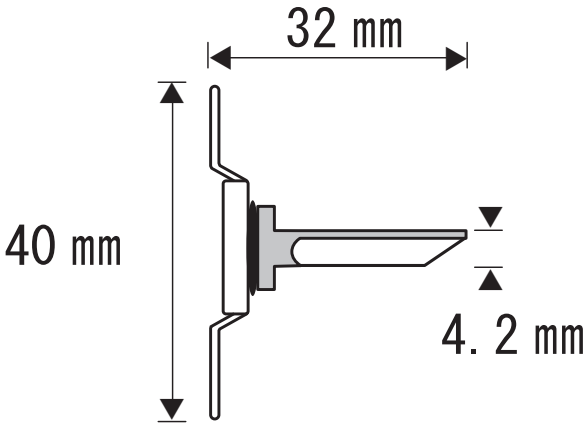
32 mm
40 mm
4. 2 mm

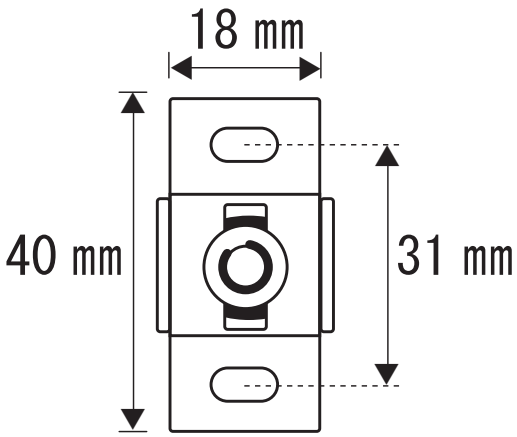
18 mm
40 mm
31 mm